ZABER

AB164 Angle Bracket, 90 Degrees Metric Mounting Holes
dimensions in mm

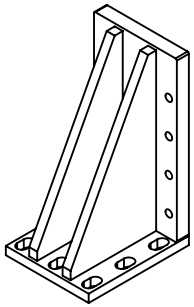

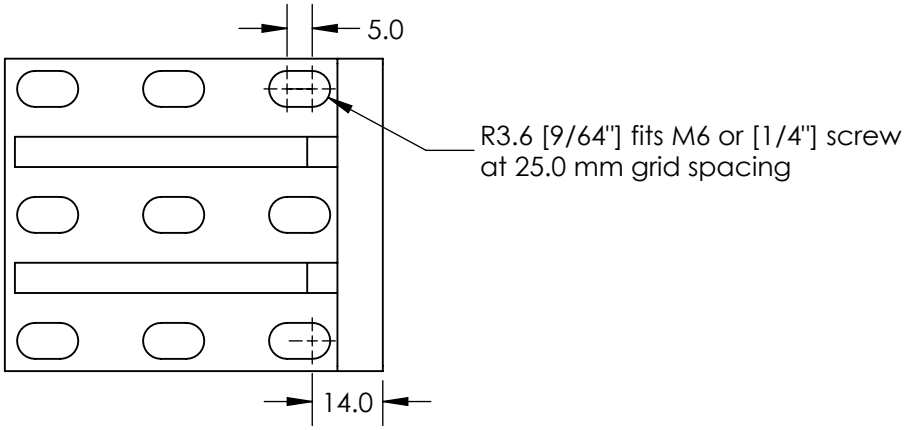

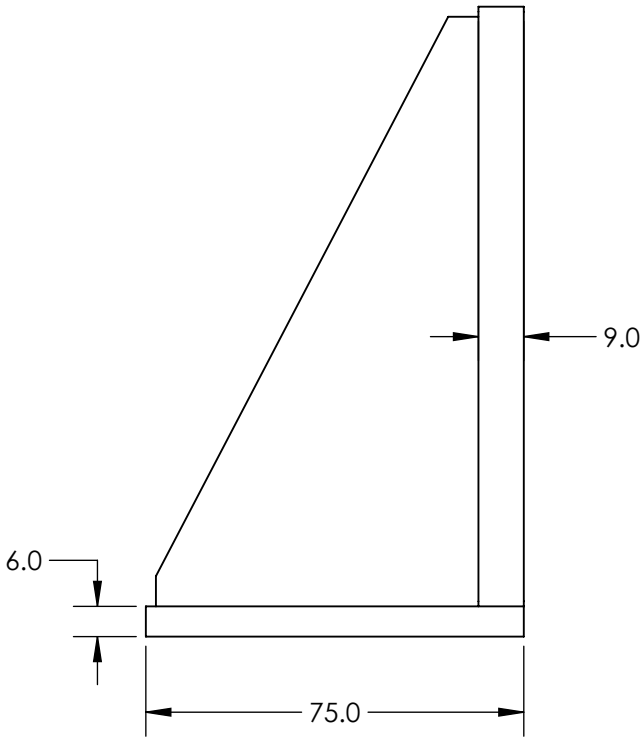

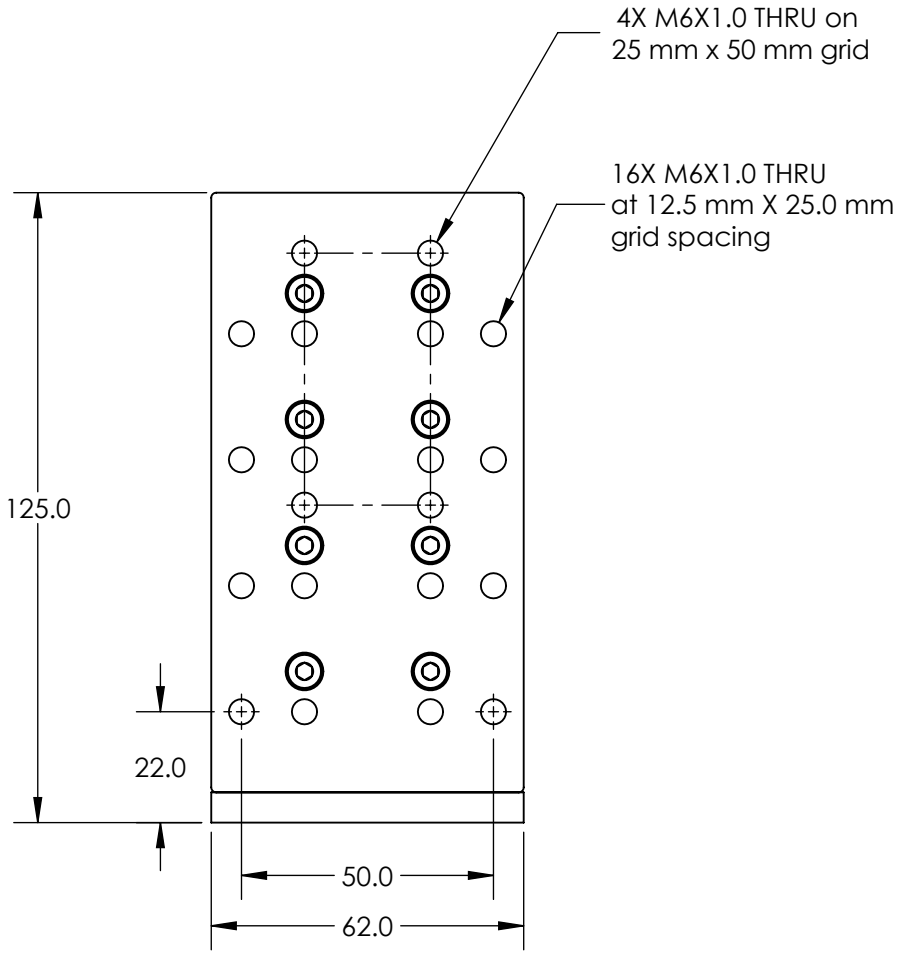

DWG 1827 R02

ZABER

Application Examples

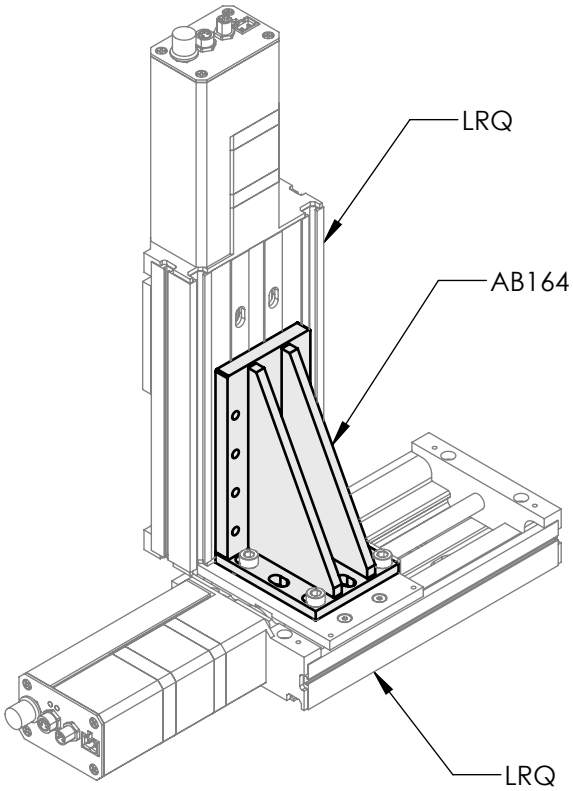

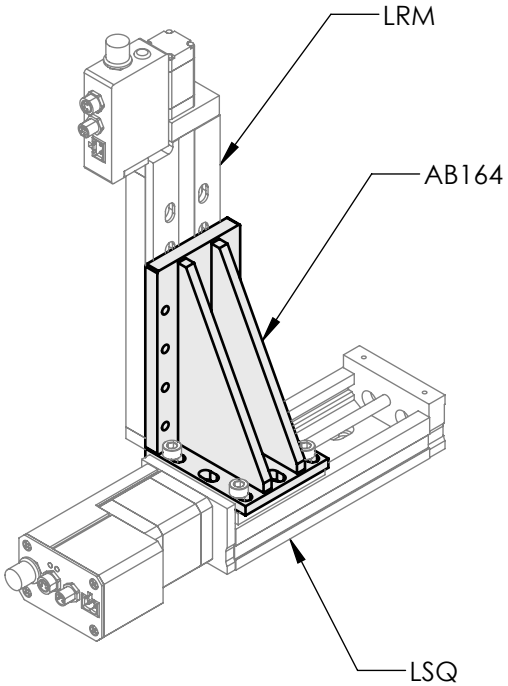

DWG 1827 R02