ZABER

AP257 Adaptor Plate, M6 Grid to Metric Mounting

dimensions in mm

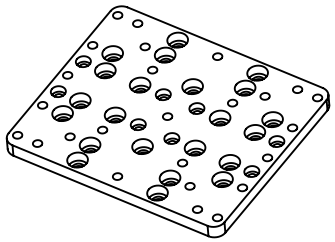

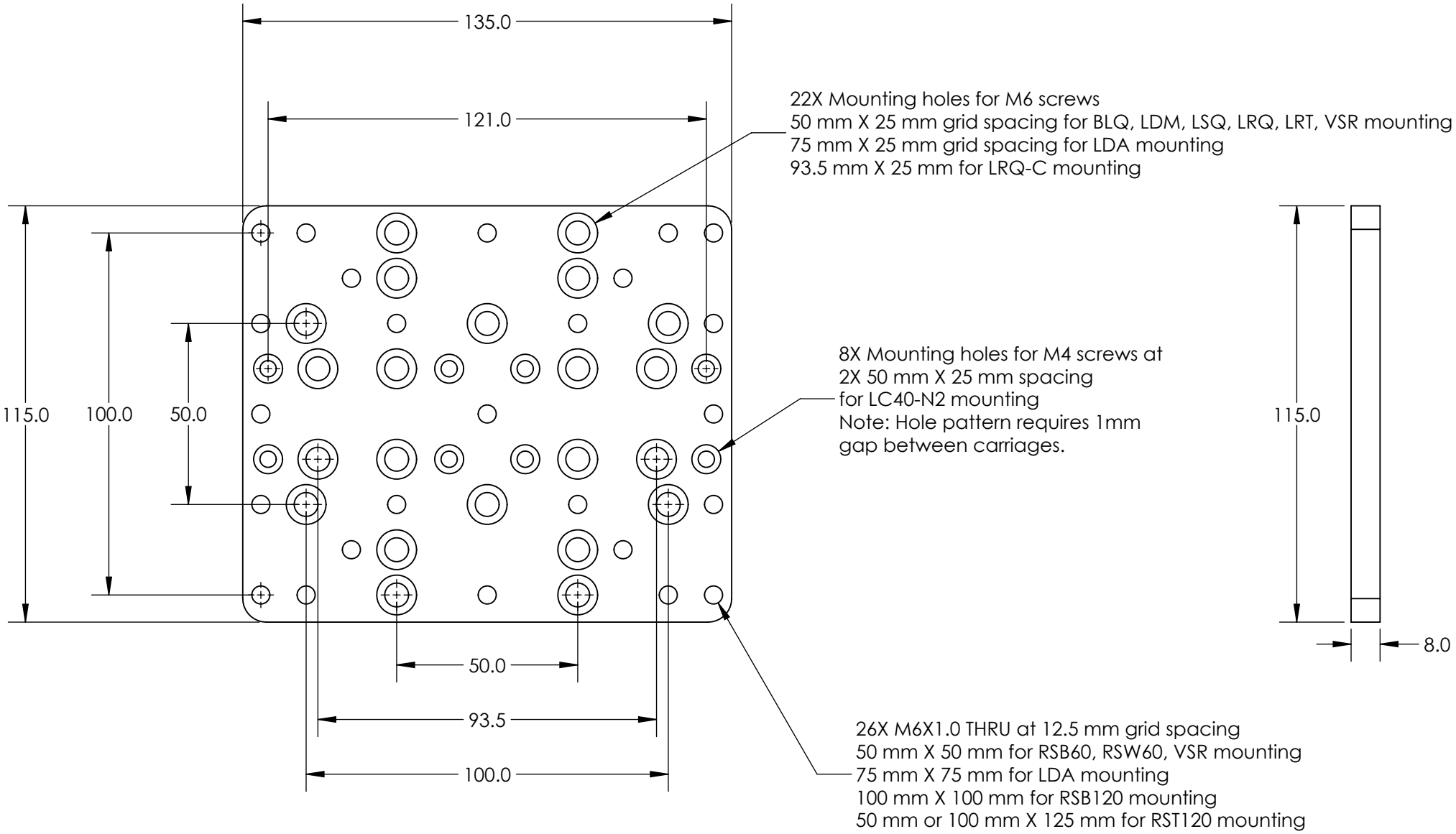

DWG 4114 R01

ZABER

Application Examples

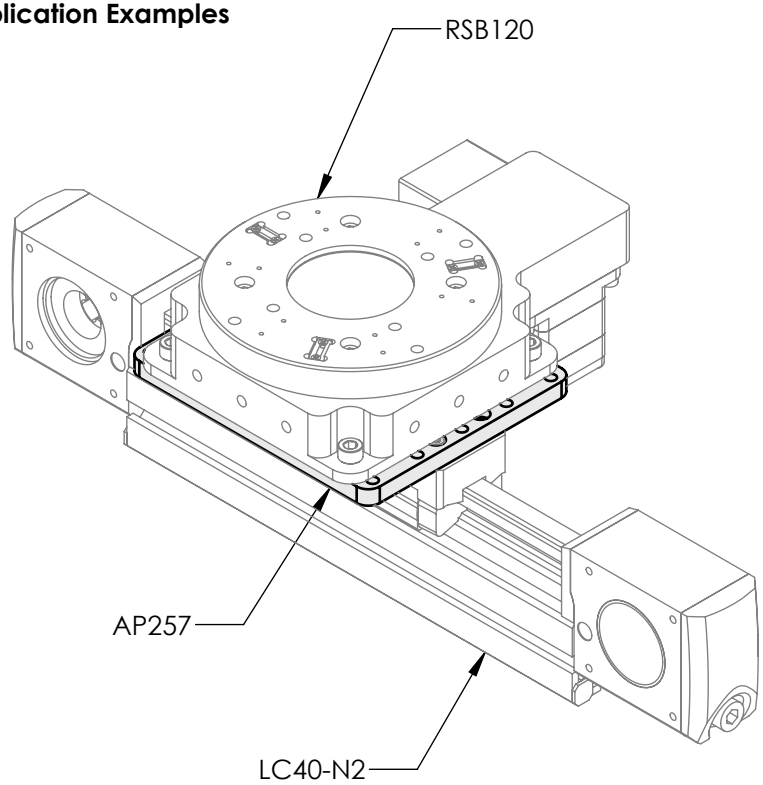

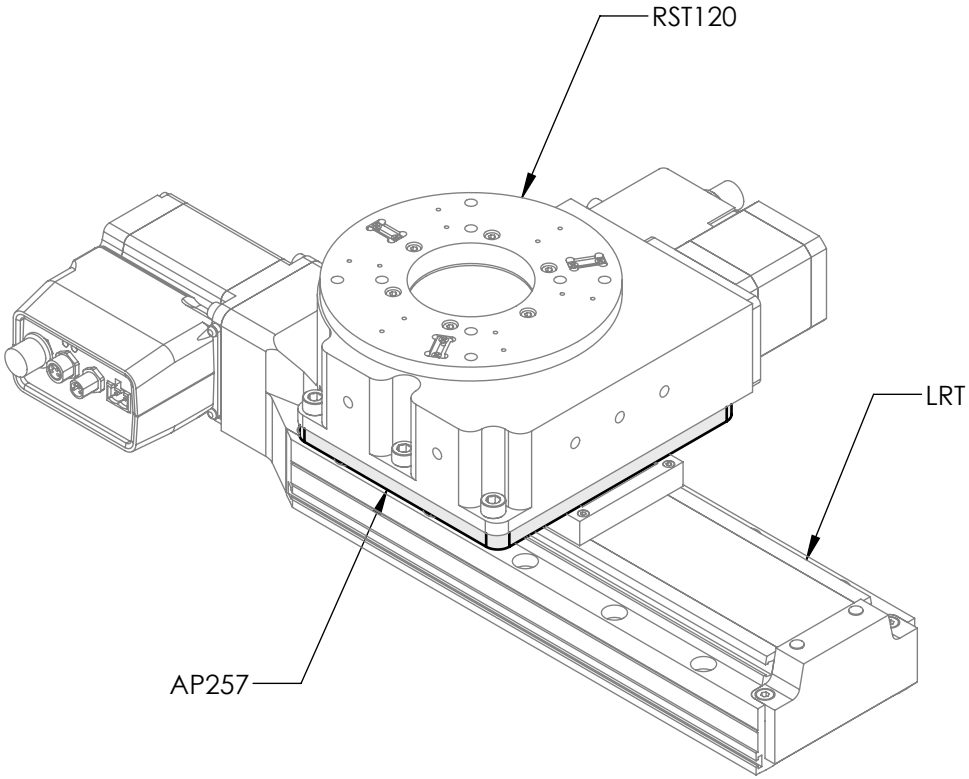

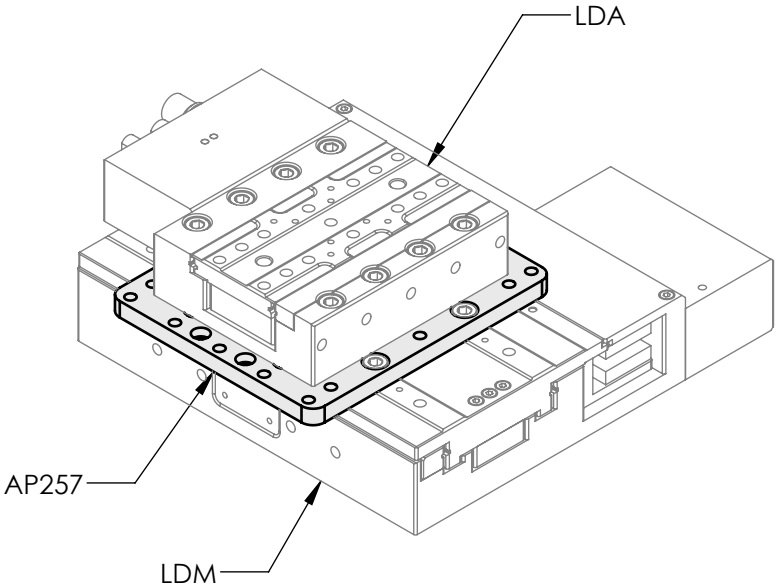

DWG 4114 R01