ZABER

DMA-AEZ Direct Drive Vertical Stage

dimensions in mm

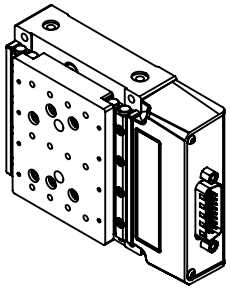

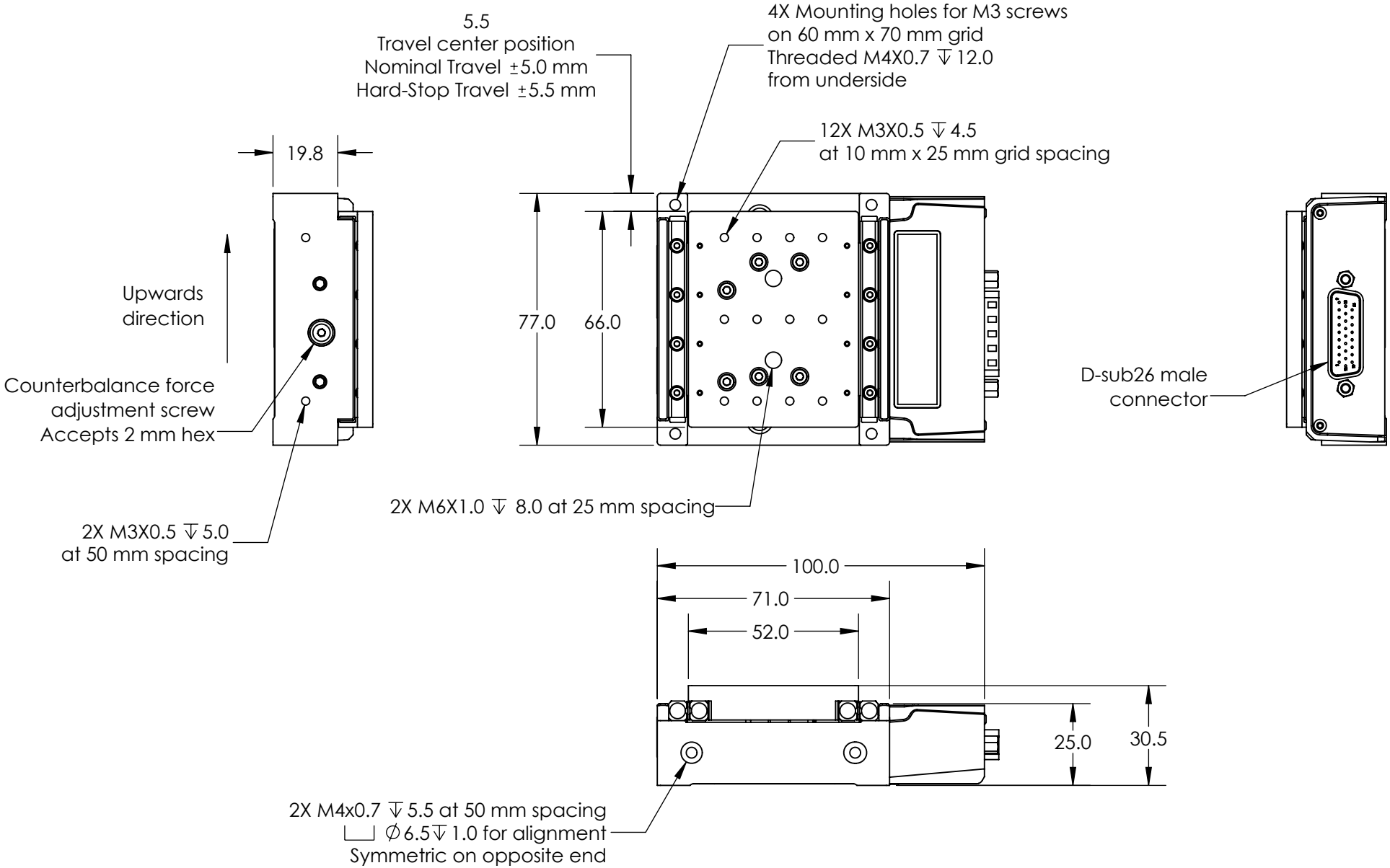

DWG 4954 R01