ZABER

RDQ150-AE Direct Drive Rotary Stage

dimensions in mm

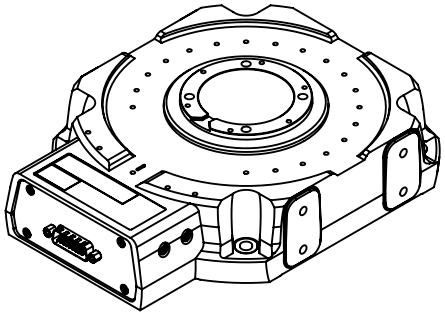

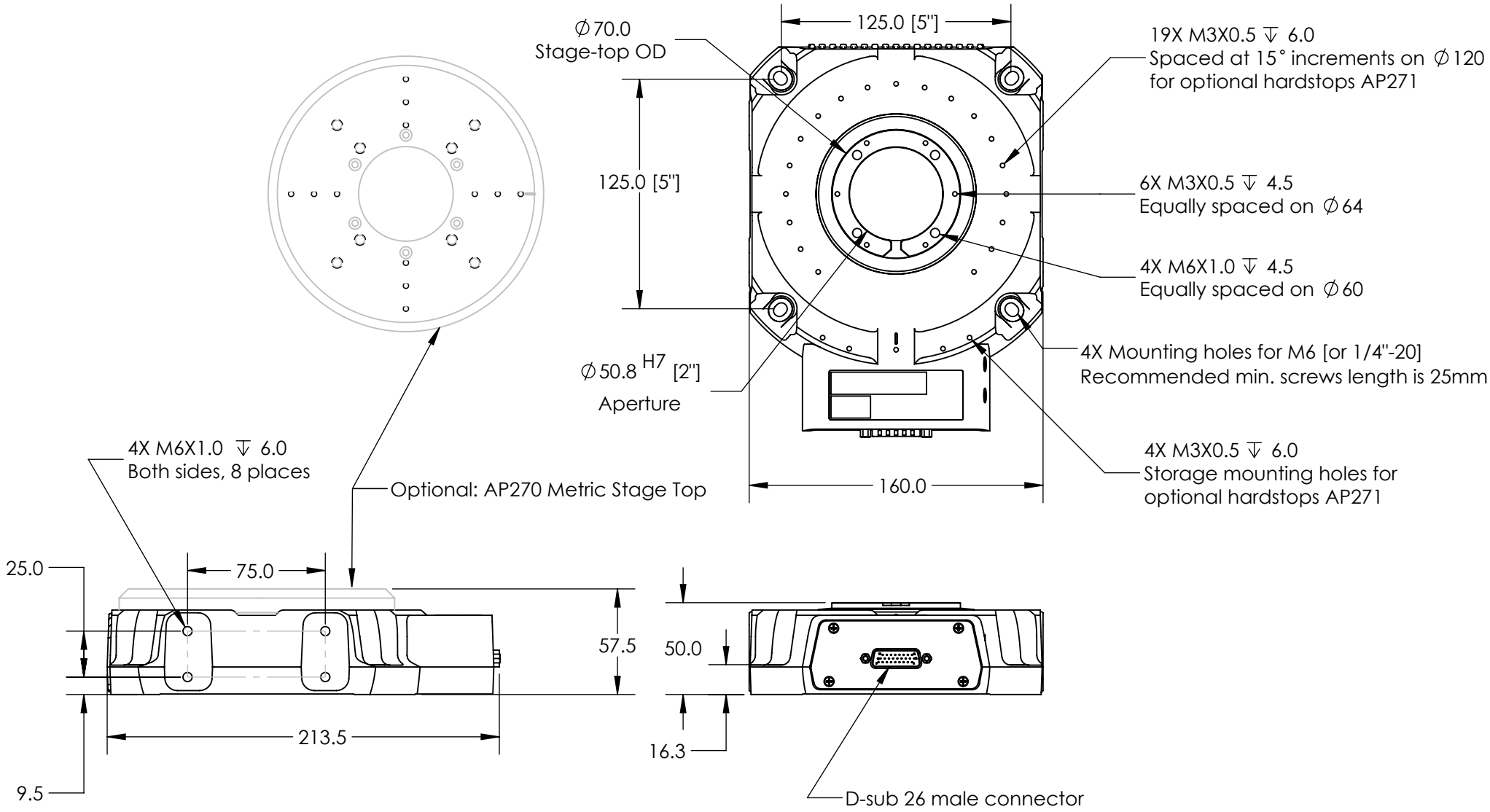

DWG 4649 R02