ZABER

X-RDQ150-AE Direct Drive Rotary Stage

dimensions in mm

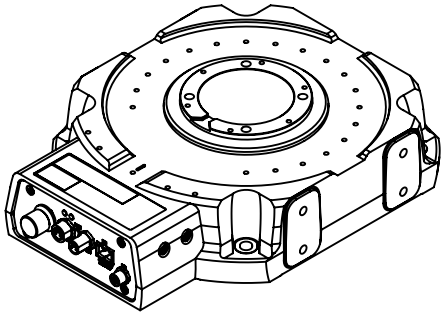

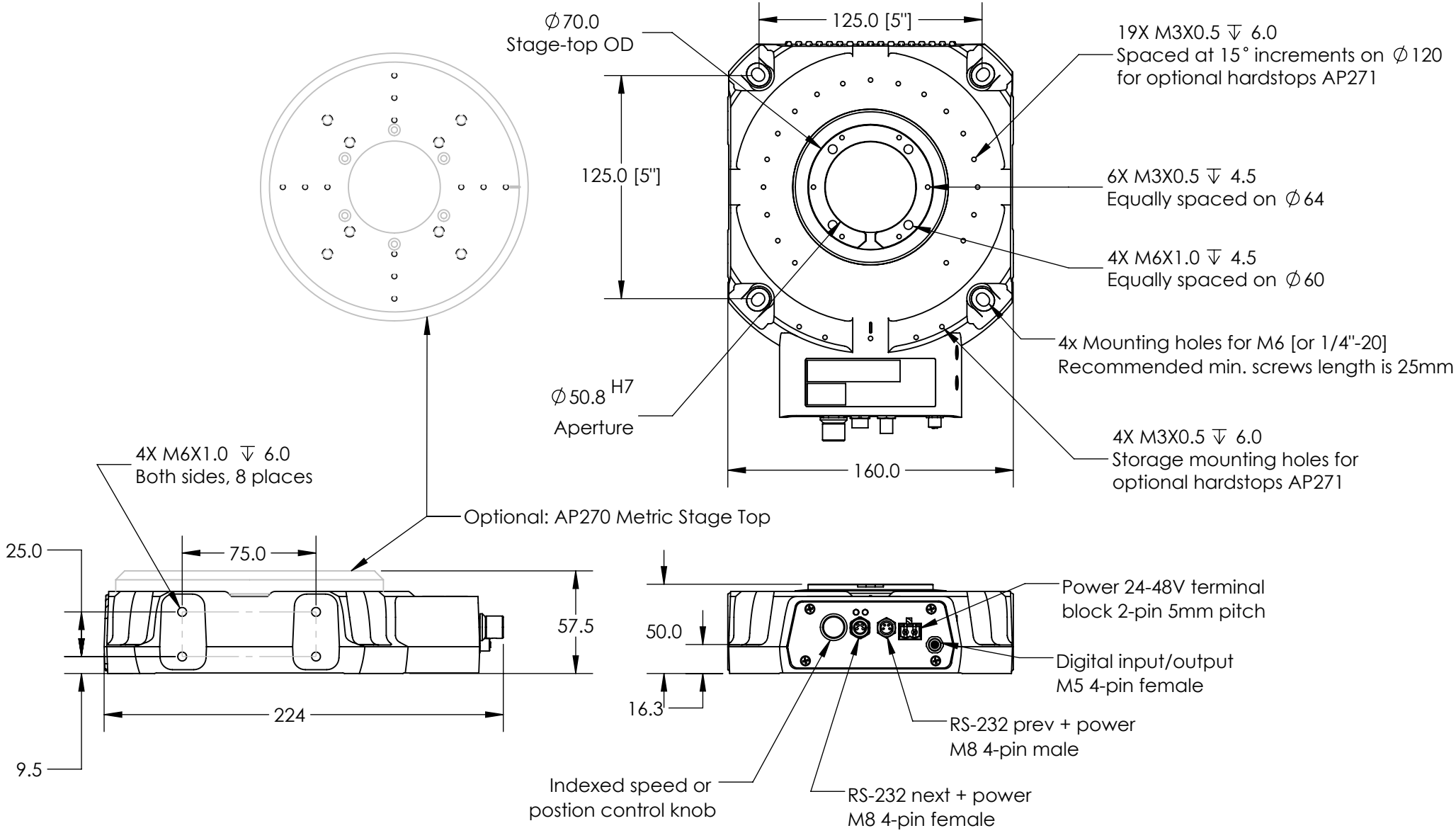

DWG 4647 R1